*lip*LEDs™

Installation Instructions

LLED8350-LSR

Overview

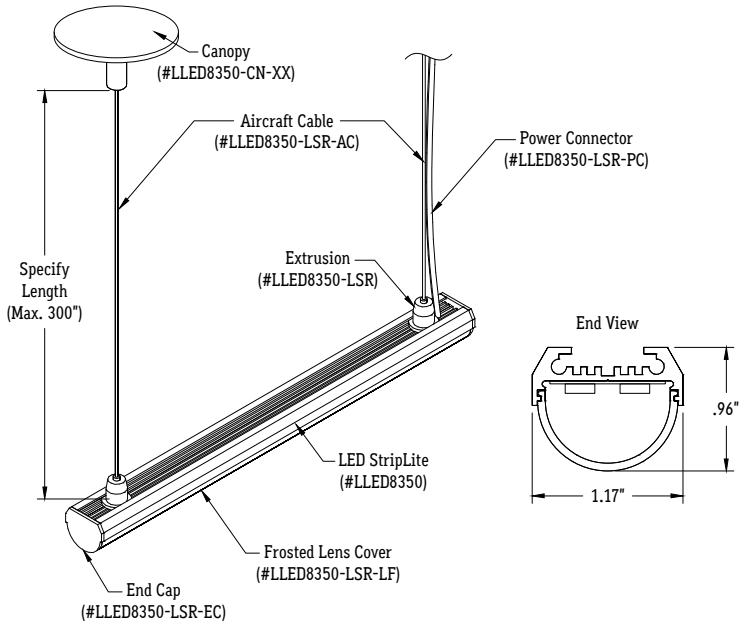

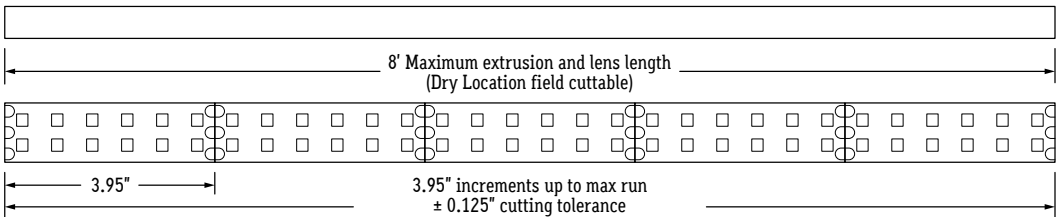

IMPORTANT VERIFY CORRECT LUMINAIRE WAS RECEIVED WITH CORRECT COLOR TEMPERATURE AND VOLTAGE BEFORE CUTTING OR INSTALLING. **CALI** WILL NOT BE RESPONSIBLE IF INCORRECT LUMINAIRE IS INSTALLED.

PRODUCT INFORMATION

- For accent, cove, edge, under cabinet lighting
- 24 volts DC for easy and safe installation
- Long life, energy efficient LEDs
- Maximum run based on 5 Amps:
  15' (8W)
  Maximum run based on 4 Amps:
  11' (8W)
- Can be ordered to specific lengths for easier installation when exact dimensions are known (Example: 10 x 10'6")
- Plug and light system
- Lead wires are typically 33" long and exit on one end

INSTALLATION RECOMMENDATIONS

- LipLEDs LED tape must be mechanically attached directly to mounting surface using mounting clips or channels
- Conduit raceway should be sleeved at one end for low voltage wires going to *trans*FORMER

ELECTRICAL

- LipLEDs products require a 24 volt DC remote *trans*FORMER
- To calculate transformers size find watts per foot (Example: 9W per foot)
- Determine length in feet (Example: 5')
- Calculate Load: Multiply Watts per Foot x Length in Feet (Example: 9W x 5'= 45W)
- Choose *trans*FORMER from catalog (Example: TRA60)
- Determine maximum distance using Maximum Wire Length Table (Example: 45 watts is between 40W and 80W. Using #14 wire, maximum distance is 37' from *trans*FORMER to first LED)

INSTALLATION TOOLS REQUIRED

- Electric compound miter saw
- 14.4 to 28 volt cordless drill
- Drill bits - concrete or wood
- Electrical cords
- Safety glasses
- Marker
- Electric hammer drill (optional)
- Phillips bits - sufficient quantity
- Electrical three ways
- Measuring tape
- Chalk line
- Sharp scissors
- Soldering iron with kit

CALI

CALIFORNIA ACCENT LIGHTING, INC.
2034 E. Lincoln Ave. #431, Anaheim, CA 92806
ph. 800.921.CALI (2254) or 714.535-7900 \ fx. 714.535.7902
info@calilighting.com \ calilighting.com

© CALI. All rights reserved. CALI reserves the right to make changes or withdraw specifications without prior notice.

INTERTEK ETL LISTED C US

FEATURES	
APPLICATIONS	Accent, Decorative Lighting
VOLTAGE	24VDC
LAMP TYPE	Color Tuning LEDs
DIMMING	DMX-512
LENGTH	Built to Order
MOUNTING	Pendant Mount
VIEWING ANGLE	120 Degrees
L70 LED LIFE	60,000 hrs.
MAXIMUM RUN* (Based on 5 amps)	15' (8W)
LISTING	Dry Location UL2108, CSA C22.2#9 UL8750, CSA250

*Maximum run is based on 5 Amps: 15' (8W)
Maximum run based on 4 Amps: 11' (8W)

WARNING

When using lipLEDs for any application, basic safety precautions should always be followed to reduce the risk of fire, electric shock, and personal injury. lipLEDs must be installed in accordance with the NEC or CEC as applicable.

- Do not exceed maximum length per circuit. Each maximum run requires additional power feed from the transformer
- Do not cover lipLEDs as the covering may cause it to overheat, melt, or ignite.
- Do not install lipLEDs in hazardous locations or closer than 6 inches from any curtain or similar combustible material.
- Do not use lipLEDs if damaged, such as broken outer jacket, loose connections, or frayed wire insulation. Inspect periodically.
- Do not submerge lipLEDs in liquid.
- Do not mount lipLEDs with staples, nails, or like means that might damage the insulation. Mount with double-sided tape and mounting clips.
- Do not install lipLEDs in places where it is subject to continuous flexing.
- Do not mount lipLEDs inside tanks or enclosures of any kind without sufficient ventilation.
- Ground Fault Circuit Interrupter (GFCI) protections are required on circuits or outlets.
- Surge protector must be set up for electrical power system to avoid damaging lipLEDs lighting system.
- Do not install in an environment where excessive heat may exist. Ambient temperature -40°F - 122°F (-20°C - 50°C).
- Only wet location models are intended for outdoors. See package label for environmental details.
- Do not install wet location model in areas where water will collect.

CALIFORNIA ACCENT LIGHTING, INC.
2034 E. Lincoln Ave. #431, Anaheim, CA 92806
ph. 800.921.CALI (2254) or 714.535-7900 \ fx. 714.535.7902
info@calilighting.com \ calilighting.com
© CALI. All rights reserved. CALI reserves the right to make changes or withdraw specifications without prior notice.

lipLEDs™ LLED8350-LSR

Installation Instructions

Product Care

Do not bend lightstrip to a diameter of less than 1.5"

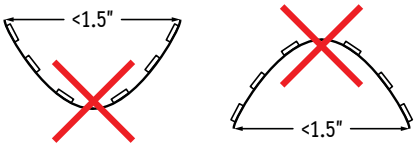

Do not bend lightstrip along a horizontal plane

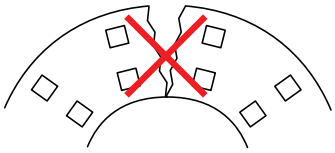

Do not fold, crease, or twist lightstrip

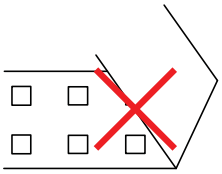

Do not cover lightstrip with any material

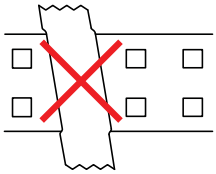

Do not connect lightstrip to power source while spooled or coiled

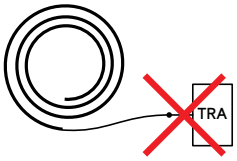

Do not apply excessive pressure to surface of lightstrip or LEDs

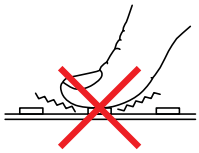

Do not overlap extrusions in any way

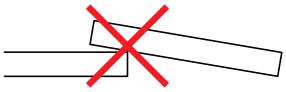

Do not install lightstrip in a zig-zag fashion

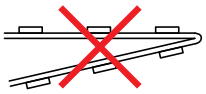

Do not overlap lightstrips at any location

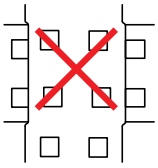

Do not penetrate lightstrip with any foreign object

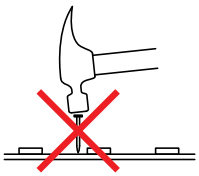

Do not install mounting clip over LED diode

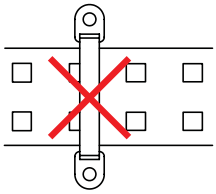

Do not cross extrusions and twist lightstrip to overlap

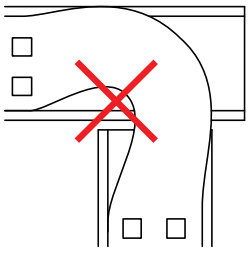

Do not install connectors in wet locations

CALIFORNIA ACCENT LIGHTING, INC.
2034 E. Lincoln Ave. #431, Anaheim, CA 92806
ph. 800.921.CALI (2254) or 714.535-7900 \ fx. 714.535.7902
info@calilighting.com \ calilighting.com

© CALI. All rights reserved. CALI reserves the right to make changes or withdraw specifications without prior notice.

*lip*LEDs™

Installation Instructions

LLED8350-LSR

Setup & Operation of Controller

1. Mount an electrical box inside the wall (not included).

NOTE: THE S.T.I.C.K. controller can be installed in a standard 60mm electrical black box.

2. Connect the wires using the green connector block.

DMX: Connect the DMX cable to the lighting receivers (for XLR: 1 = ground, 2 = DMX -, and 3 = DMX +)

POWER: Connect the AC/DC adapter. Do not invert the + and ground.

3. Mount the interface on a wall.

NOTE: First, plug in the green connector block. Mount the back side of the interface to the wall with at least 2 screws. Close the unit by clipping the front panel onto the back plate. Wait 30 seconds for the touch sensitivity to adjust.

4. Use TOOLS.EXE to set parameters and ESA2 (PC and Mac) to make lighting programs.

CONTROLLER

- DMX Standalone Controller with glass face (128 channels)
- 3 touch-sensitive buttons (on/off/miode, previous, next)
- Up to 24 dynamic or static scenes (8 first visualized by an LED)
- Live intensity and color settings
- Programmable through included USB cable and control software
- Compatible with any DMX fixture or DMX LED driver
- Ready to use (pre-loaded with 8 scenes and 42 RGB fixtures)
- Latest ARM CPU technology
- Customized design for OEM, wall mountable
- One dry contact trigger port on PCB

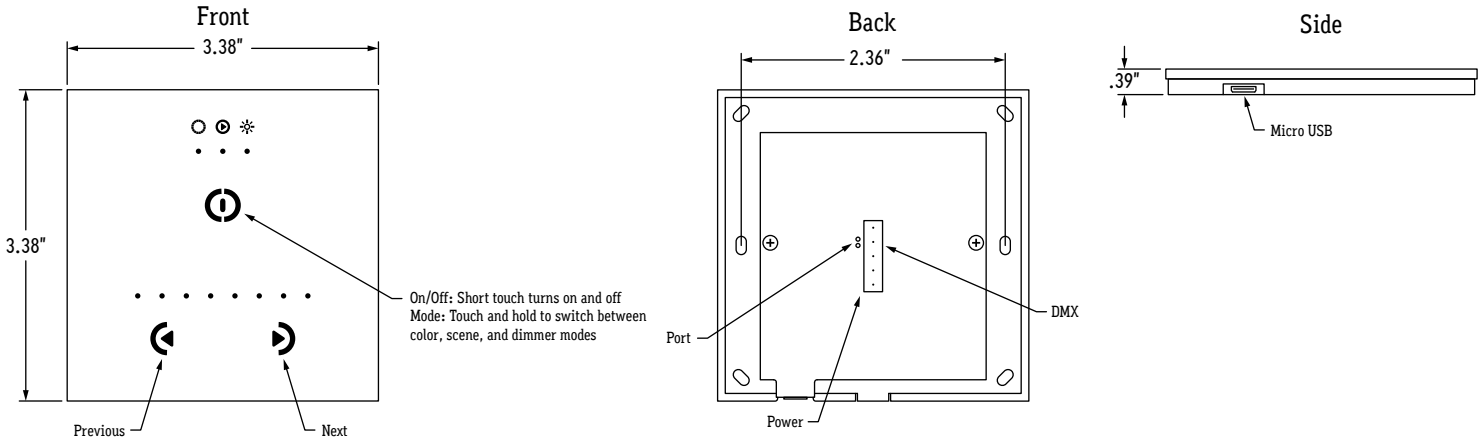

SPECIFICATIONS	
PACKAGE	Controller, CD-ROM, USB cable, connector block
OS REQUIREMENTS	Mac OS X 10.6/10.7/10.8, Windows XP/Vista/7/8 32/64 bit, and USB 2.0
SOFTWARE	Easy Stand Alone, ESA2 (PC & Mac)
VERSIONS	Black or white glass design
CONNECTIONS	Power (2 pins), DMX, (3 pins), Port (2 pins), Micro USB
POWER	5.5V to 12VDC (AC/DC adapter in option). Max 5.5V with USB
CERTIFICATIONS	EC, EMC, ROHS, ETL, UL
KEYPAD	86x76x10mm, 110g
PACKAGE	140x135x50, 365g
USE	Environment IP20. Temperature 0°C to 50°C

AVAILABLE MEMORY	
CHANNELS	**STEPS**
8	1691
16	1011
32	557
48	383
64	291
80	233
96	195
112	166
128	145

CALIFORNIA ACCENT LIGHTING, INC.
2034 E. Lincoln Ave. #431, Anaheim, CA 92806
ph. 800.921.CALI (2254) or 714.535-7900 \ fx. 714.535.7902
info@calilighting.com \ calilighting.com

© CALI. All rights reserved. CALI reserves the right to make changes or withdraw specifications without prior notice.

lipLEDs™ LLED8350-LSR

Installation Instructions

Wiring Diagram

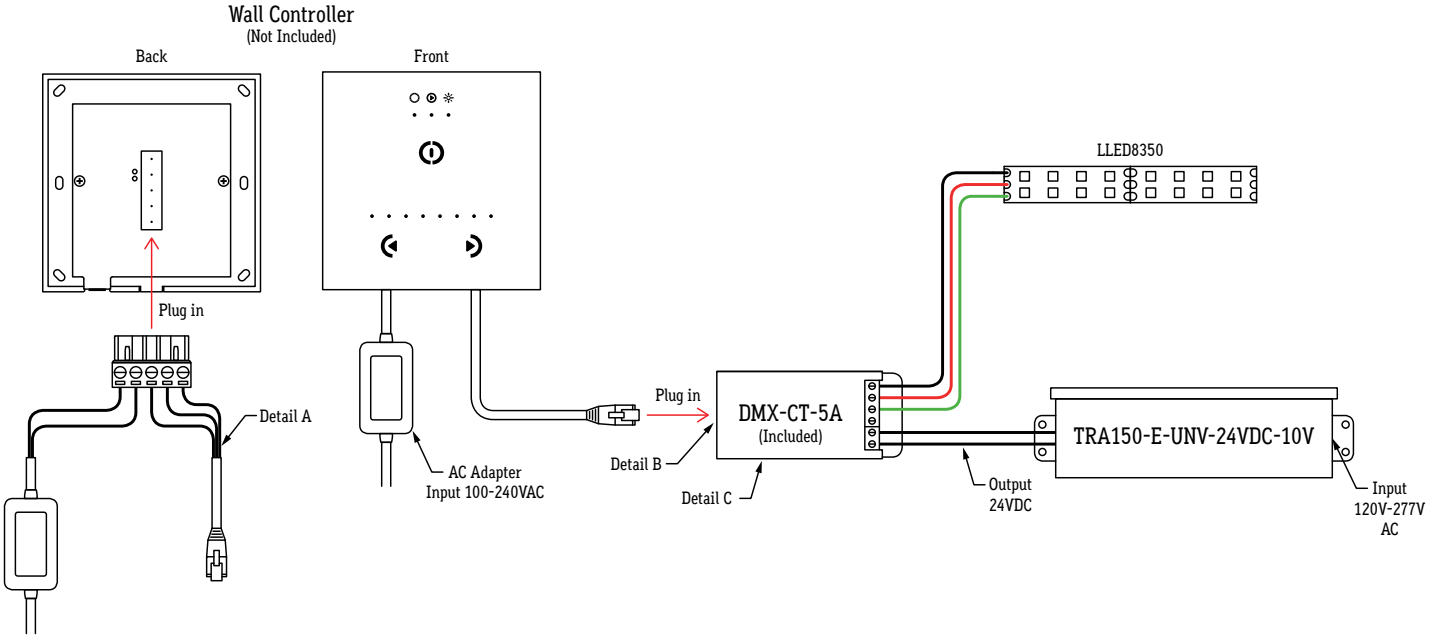

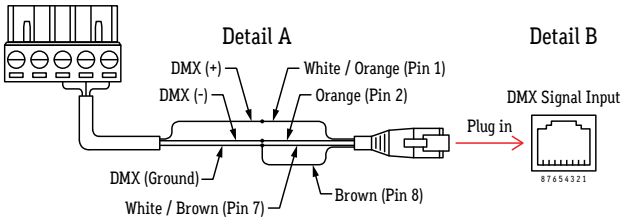

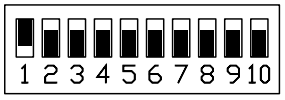

Install Nicolaudie Easy Standalone Software
https://www.nicolaudie.com/en/esa.htm
Program DMX-RGB-128C Scene Setup

Scene number	Red	Blue	Green	Color temperature program
Scene-0	162	182	255	White

Set Dimming Options:
- Select loop option
- Select fade option
- Set values at fade time 00m01500
- Set values at hold time 00m01500
- Set value dimmer 100

CALIFORNIA ACCENT LIGHTING, INC.
2034 E. Lincoln Ave. #431, Anaheim, CA 92806
ph. 800.921.CALI (2254) or 714.535-7900 \ fx. 714.535.7902
info@calilighting.com \ calilighting.com
© CALI. All rights reserved. CALI reserves the right to make changes or withdraw specifications without prior notice.

LLED8350-LSR REQUIRES A TEAM EFFORT TO ENSURE SECURE AND CORRECT INSTALLATION

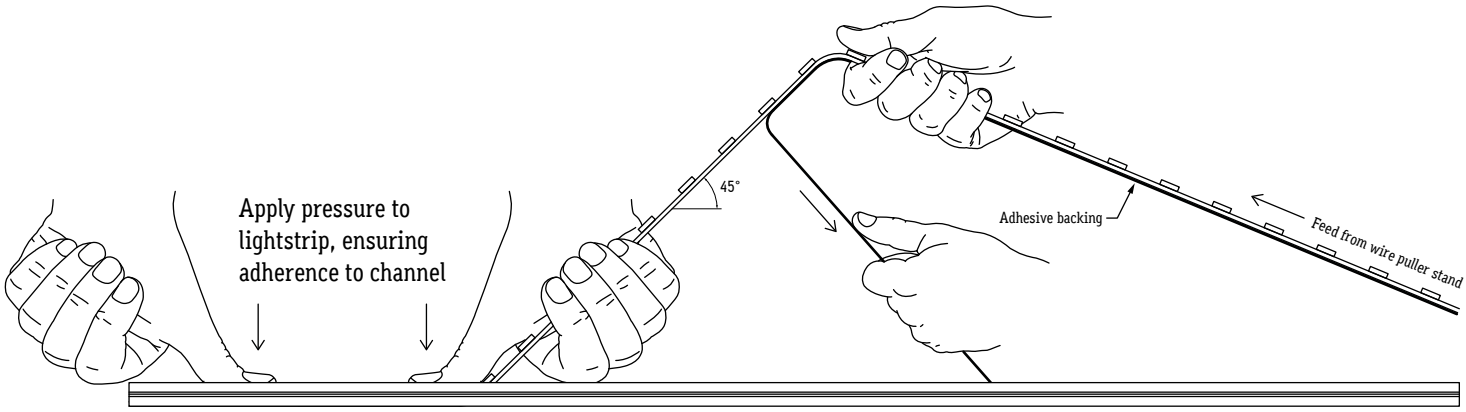

One person on one end applies pressure to LLED8350, securing it to channel

Another person unreels LLED8350 from spool, holding lightstrip at 45° angle

IMPORTANT NOTE TO AVOID COLOR SHIFT:

- Do not paint on or over fixture lens or LEDs. Paint or any other substance on lens or LEDs will cause a shift in color temperature.
- Soffit must be painted evenly with a neutral white to avoid color shift.

CALI
CALIFORNIA ACCENT LIGHTING, INC.
2034 E. Lincoln Ave. #431, Anaheim, CA 92806
ph. 800.921.CALI (2254) or 714.535-7900 \ fx. 714.535.7902
info@calilighting.com \ calilighting.com
© CALI. All rights reserved. CALI reserves the right to make changes or withdraw specifications without prior notice.

lipLEDs™ LLED8350-LSR

Installation Instructions

Preparing Fixture (Dry Location)

1. Measure area where LLED8350-LSR will be installed.

RECOMMENDATION: Use chalk line to ensure a straight installation.

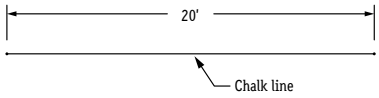

2. Remove adhesive backing from lightstrip.

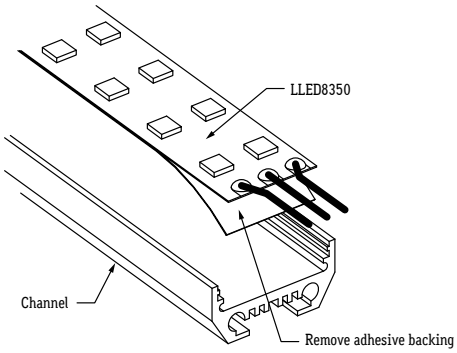

3. Install lightstrip into channel.

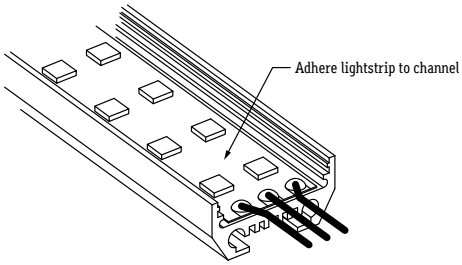

4. Snap lens into channel.

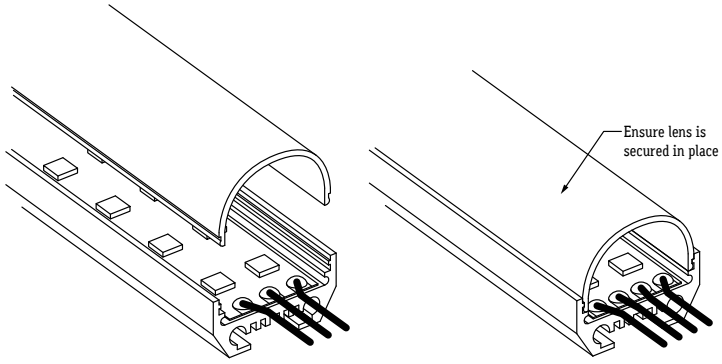

5. Conduct continuity test.

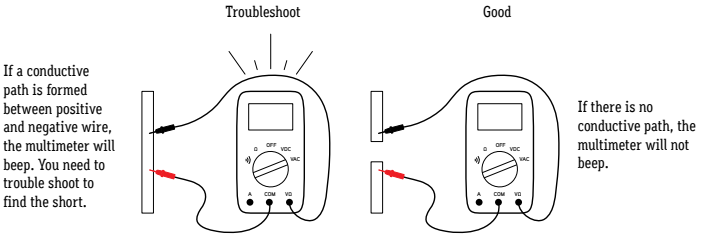

See page 10 for troubleshooting guide

6. Set voltmeter to DC voltage, then test power source before connecting.

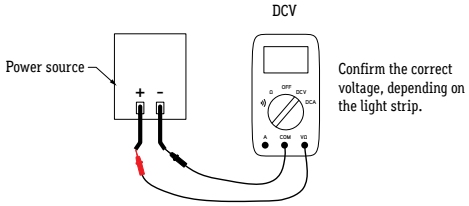

7. Connect power source to power connector.

TIP: If LEDs do not turn on, flip polarity (+,-) or power source connection to power connector.

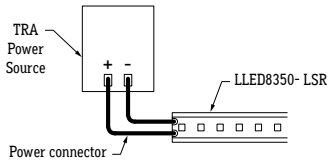

CALIFORNIA ACCENT LIGHTING, INC.
2034 E. Lincoln Ave. #431, Anaheim, CA 92806
ph. 800.921.CALI (2254) or 714.535-7900 \ fx. 714.535.7902
info@calilighting.com \ calilighting.com

© CALI. All rights reserved. CALI reserves the right to make changes or withdraw specifications without prior notice.

lipLEDs™ LLED8350-LSR

Installation Instructions

Pendant Mount

1. Cut aircraft cable to desired length.

RECOMMENDATION: Use sharp wire cutters to ensure a clean cut.

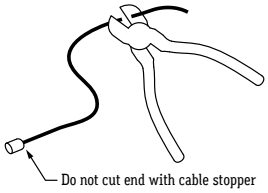

2. Feed aircraft cable through cable coupler, then feed cable through cable gripper.

TIP: Leave end of aircraft cable as close to flush as possible with bottom of cable feeder.

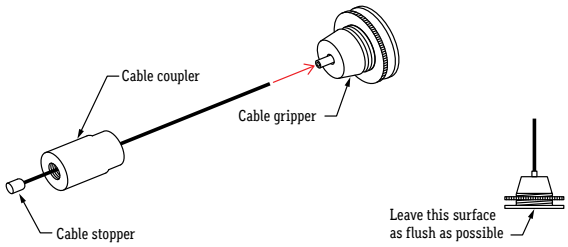

3. Mount gem bar to junction box.

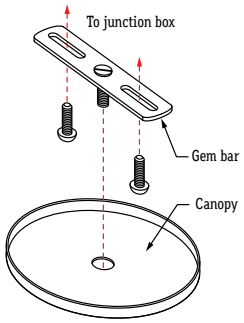

4. Screw cable coupler to mounted canopy.

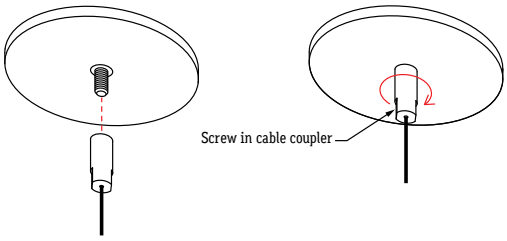

5. Slide cable gripper into channel, then tighten fastening ring. Repeat as necessary.

NOTE: Use a minimum of 2 pendants for every 8' of extrusion.

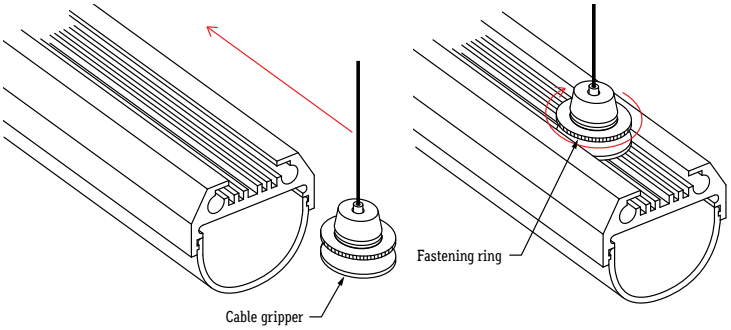

6. Install end cap only after pendant has been securely mounted.

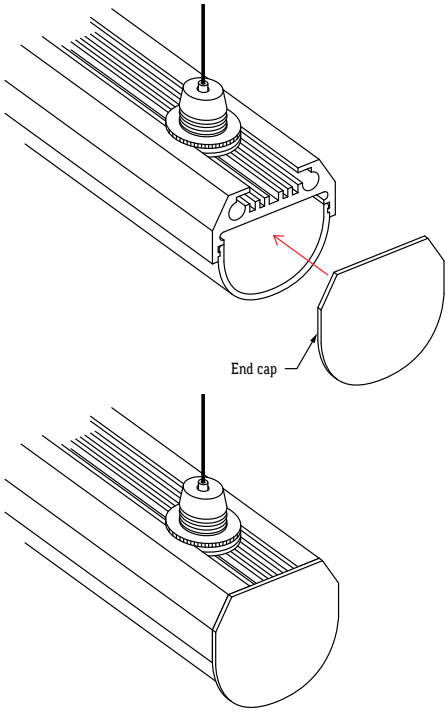

CALIFORNIA ACCENT LIGHTING, INC.
2034 E. Lincoln Ave. #431, Anaheim, CA 92806
ph. 800.921.CALI (2254) or 714.535-7900 \ fx. 714.535.7902
info@calilighting.com \ calilighting.com

© CALI. All rights reserved. CALI reserves the right to make changes or withdraw specifications without prior notice.

TROUBLESHOOT

- Do not reset breaker multiple times.
- If the unit is overloaded the breaker will trip shutting off the transformer and lights.
- If the breaker reset button has been held down by hand or any type of pressure (example: duct tape), or if the breaker has been reset multiple times without trouble shooting, the unit will:
  - Burn the transformer bobbin
  - Burn the thermal or magnetic breaker
  - Burn the primary or secondary wires due to high amperage caused by overload and/ or short circuit in line which will not allow the breaker to reset
  - Damage the lighting

1. Turn off power before beginning. Check for any twisting or damage to the circuit in the LED lightstrip. If there is excessive damage and circuit is broken, the lightstrip must be replaced.

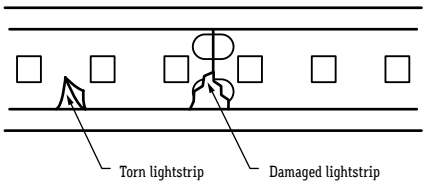

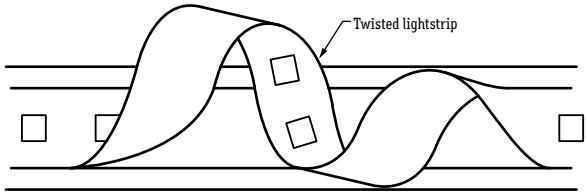

2. Check for metal particles or other foreign objects causing the short.

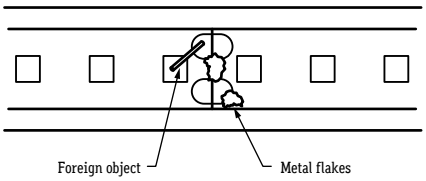

3. Check if cut is clean and not frayed, causing positive and negative copper pads to touch.

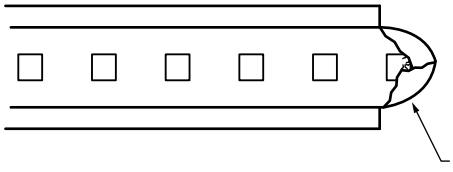

4. Ensure the run is not too long and overlapping.

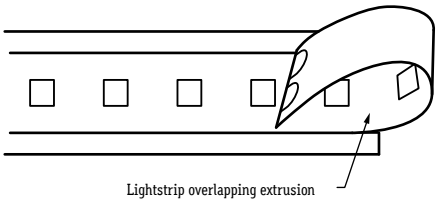

5. Ensure copper pads are not making contact with aluminum extrusion.

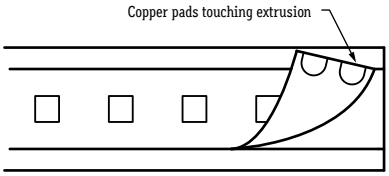

6. Check wiring diagram.

7. Reset power to controller.

CALI
CALIFORNIA ACCENT LIGHTING, INC.
2034 E. Lincoln Ave. #431, Anaheim, CA 92806
ph. 800.921.CALI (2254) or 714.535-7900 \ fx. 714.535.7902
info@calilighting.com \ calilighting.com
© CALI. All rights reserved. CALI reserves the right to make changes or withdraw specifications without prior notice.

WATTS (VA) PER CIRCUIT (Maximum wire length to prevent voltage drop)

WIRE SIZE	VOLTAGE	40 VA	80 VA	120 VA	160 VA	200 VA	240 VA	260 VA	280 VA	300 VA	320 VA
14GA	12V	37'	18'	12'	9'	7'	6'	6'	5'	5'	4'
14GA	24V	75'	37'	25'	19'	15'	12'	12'	11'	10'	9'
12GA	12V	59'	29'	20'	15'	12'	9'	9'	8'	8'	7'
12GA	24V	118'	59'	39'	30'	24'	18'	18'	17'	16'	15'
10GA	12V	94'	47'	31'	23'	19'	14'	14'	13'	12'	12'
10GA	24V	188'	94'	63'	47'	38'	29'	29'	27'	25'	24'
8GA	12V	149'	74'	50'	37'	30'	23'	23'	21'	20'	18'
8GA	24V	299'	149'	100'	75'	60'	46'	46'	43'	40'	37'

TRANSFORMER CARE

- Do not submerge transformer in any liquid
- Do not leave any exposed wires
- Do not cover transformer without proper ventilation
- Do not install damaged transformer

CALI
CALIFORNIA ACCENT LIGHTING, INC.
2034 E. Lincoln Ave. #431, Anaheim, CA 92806
ph. 800.921.CALI (2254) or 714.535-7900 \ fx. 714.535.7902
info@calilighting.com \ calilighting.com
© CALI. All rights reserved. CALI reserves the right to make changes or withdraw specifications without prior notice.

CLEANING MATERIALS FOR LENSES AND EXTRUSIONS

The use of solvents and/or cleaners which are not compatible with polycarbonate will result in the softening, crazing, and/or cracking of the plastic part. This is especially true of polycarbonate lamps and mounting bases which may be under stress in their normal applications.

COMPATIBLE WITH POLYCARBONATE:

- Mild soap and water
- Mineral Spirits
- Isobutyl alcohol
- VM and P Naphtha
- Varsol No.2
- Mexane
- Freone TF and TE-35
- Ethanol
- Dirtex
- 2% Sol. Reg. Joy
- 10% Sol Bon Ami
- White Kerosene
- Methyl alcohol
- Heptane
- Petroleum Ether/65 degrees C
- Isopropyl alcohol
- Lacryl PCL-2035 polycarbonate cleaner

NOT COMPATIABLE WITH POLYCARBONATE

- Trichlor
- Gasoline
- ll Liquid Detergents
- Acetone
- Carbon Tetrachloride
- Pink Lux (Phosphate free)
- Triclene
- Chlorinated Hydrocarbons
- #1 & #3 denatured alcohol
- Methyl Ethyl Keytone (MEK)
- Texize-8006, 8129, 8758
- MIBK
- Liquid Cleaner – 8211
- Toluol
- Agitene
- Benzol
- Ajax
- Kleenol Plastics
- Lysol
- Stanisol Naphtha
- Oils
- Lemon Joy (phosphate free)
- Diversol
- Lestoil

CALI
CALIFORNIA ACCENT LIGHTING, INC.
2034 E. Lincoln Ave. #431, Anaheim, CA 92806
ph. 800.921.CALI (2254) or 714.535-7900 \ fx. 714.535.7902
info@calilighting.com \ calilighting.com
© CALI. All rights reserved. CALI reserves the right to make changes or withdraw specifications without prior notice.