transFORMER™

Installation Instructions

TRA80-E

Overview

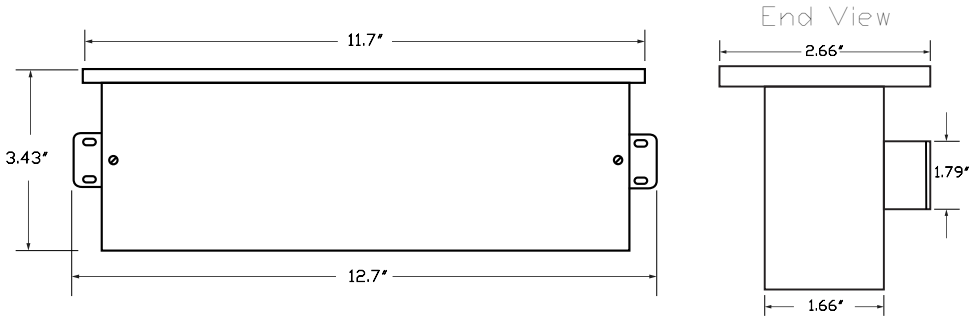

± .5" measurement tolerance

PRODUCT INFORMATION

- Enclosure temperature does not exceed 55°C in a 40°C ambient, fully loaded
- Wiring compartment has 2 knockouts sized for 3/4 inch screw cable connectors
- The enclosure is powder coated white
- The transformer is UL8750 , CSA C22.2 No. 250.0-08, ENEC, TUV EN61347-1, EN61347-2-13 UL60950-1, TUV EN60950-1

WARNING

- Read instructions entirely before installation
- Turn off electricity before wiring
- Only qualified personnel should install the unit
- Installation must comply with the NEC
- Ensure the unit has input, output voltage, and output wattage proper for your application

DIMMING PROTOCOL (0-10V)

Technical Requirements For Control Equipment (0-10V Protocol)

- The output current level of the dimmable driver is controlled by DC voltage (0-10V) applied to the control terminals (blue and white). The light output of LEDs is controlled by the amount of output current from the dimmable driver.
- The control device must be capable of sinking a DC current flow from the driver. The maximum amount under any condition is 500 microamps (uA) per driver.
- The control terminals of the dimmable driver are isolated from the power lines and are suitable for use as Class 2 wiring. Multiple driver are desired for use with same control device, the control terminals may be connected in parallel in a bus configuration.
- Since the control bus is Class 2 wiring, all control devices that are connected to the power line must have proper isolation between the power line and the control terminals/bus.
- The control device, which intends to control more than one dimmable driver, must be capable of sinking the total current supplied to control bus by the drivers.
- If the control terminals/bus is shorted in any case, the current on the control terminals/bus will be 500 microamps (uA) per driver maximum.
- If the control terminals are opened, the voltage on the control terminals will then be 10V ± 0.5 volt. As a result, dimmable driver supplies maximum output current to LEDs under this condition.
- The driver is intended for use with control voltages between 0 and 10 VDC. The control equipment must not impose a voltage greater than 11 V peak maximum on the driver control terminals.

Click here for list of electronic transformers

(TRA-E) 0-10V Dimming

CALIFORNIA ACCENT LIGHTING, INC.
2034 E. Lincoln Ave. #431, Anaheim, CA 92806
ph. 800.921.CALI (2254) or 714.535-7900 \ fx. 714.535.7902
info@calilighting.com \ calilighting.com

© CALI. All rights reserved. CALI reserves the right to make changes or withdraw specifications without prior notice.

transFORMER™

Installation Instructions

TRA80-E

Step by Step

MOUNTING

- The transformer must be mounted in at least 10" of a free flow air space for proper ventilation
- The transformer must never be mounted next to or above heat radiated objects
- The maximum ambient temperature should not exceed 50°C (110°F)

CONNECTION

- Open the wire compartment and remove knockouts for input and output, install strain reliefs (wire clamps). Use only right size and UL approved wire nuts

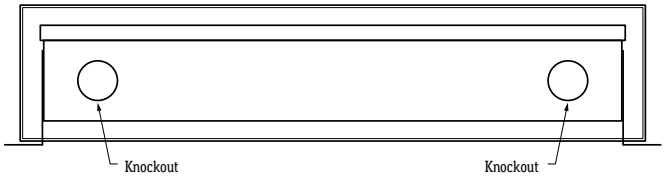

INPUT CONNECTION

- Bring your line and neutral wires through input strain relief and connect them to primary voltage wires (refer to wiring diagram)

OUTPUT CONNECTION

- Bring your power connector wires through output strain relief and connect them to the secondary transformer leads. Ensure that connection is very tight (refer to wiring diagram)

GROUNDING

- The transformer is grounded to the enclosure. The enclosure in turn should be grounded in accordance with NEC and local code. Connect the transformer green wire to the ground.

TROUBLESHOOT

- Do not reset breaker multiple times.
- If the unit is overloaded the breaker will trip shutting off the transformer and lights.
- If the breaker reset button has been held down by hand or any type of pressure, or if the breaker has been reset multiple times without trouble shooting, the unit will:
  - Burn the primary or secondary wires from too much overload and not letting the breaker reset
  - Damage the lighting

1. Check your load

- To calculate transformers size find watts per foot (Example: 4W per foot). Determine length in feet (Example: 16').
  Calculate load: multiply watts per foot x length in feet (Example: 4W x 16'= 64W)
- 80 watts load at 80% = 64 watts
- If you exceed 80 watts, divide your power to another transformer or order a larger sized transformer

2. Check for continuity on your lighting

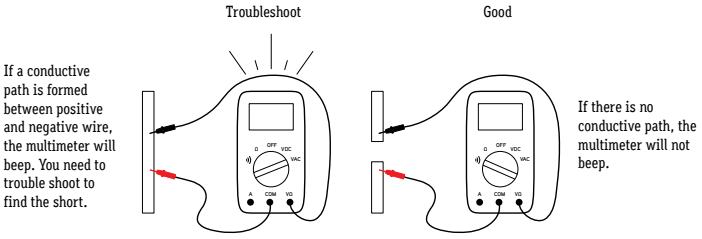

3. Check lighting for any electrical components touching and creating a short

4. Troubleshoot until continuity is removed from the lighting, then turn on transformer

Set voltmeter to DC voltage, depending on transformer type, then test power source before connecting

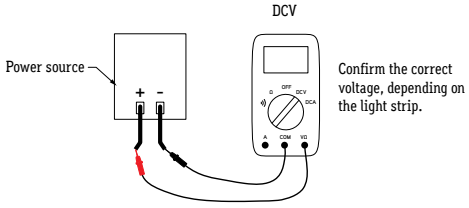

Connect power source to power connector or wires

TIP: If LEDs do not turn on, flip polarity (+,-) or power source connection to power connector.

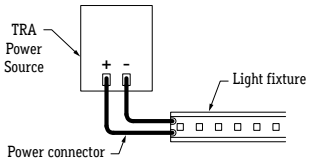

CALI

CALIFORNIA ACCENT LIGHTING, INC.
2034 E. Lincoln Ave. #431, Anaheim, CA 92806
ph. 800.921.CALI (2254) or 714.535-7900 \ fx. 714.535.7902
info@calilighting.com \ calilighting.com

© CALI. All rights reserved. CALI reserves the right to make changes or withdraw specifications without prior notice.

transFORMER™

Installation Instructions

TRA80-E

Wiring Diagrams

FEATURES

APPLICATIONS	Low Voltage Lighting
PRIMARY VOLTAGE	Universal Voltage (120V-277V)
SECONDARY VOLTAGE	12VDC or 24VDC
MAXIMUM WATTS	80VA (Watts)
FINISH	White
RATING	Indoor or Outdoor
CLASS	2 (24VDC Only)
DIMMING	0-10V
LISTING	UL

ELECTRICAL

transFORMERs' primary side voltage is universal voltage. The secondary side is 12VDC or 24VDC. transFORMERs are dimmable with 0-10V interfaces. (See protocol below)

0-10V DIMMING PROTOCOL

The output current level of the dimmable driver is controlled by DC voltage (0-10V) applied to the control terminals (blue and white). The light output of LEDs is controlled by the amount of output current from the dimmable driver. The control device must be capable of sinking a DC current flow from the driver. The maximum amount under any condition is 500 microamps (uA) per driver. The control wires (0-10V) of the dimmable driver are isolated from the power lines and are suitable for use as Class 2 wiring. If multiple drivers are desired for use with same control device, the control terminals may be connected in parallel in a bus configuration. Since the control bus is Class 2 wiring, all control devices that are connected to the power line must have proper isolation between the power line and the control terminals/bus. The control device, which intends to control more than one dimmable driver, must be capable of sinking the total current supplied to control bus by the drivers. If the control terminals/bus is shorted in any case, the current on the control terminals/bus will be 500 microamps (uA) per driver maximum. If the control terminals are opened, the voltage on the control terminals will then be 10V ± 0.5 volt. As a result, dimmable driver supplies maximum output current to LEDs under this condition. The driver is intended for use with control voltages between 0 and 10 VDC. The control equipment must not impose a voltage greater than 11 V peak maximum on the driver control terminals.

TRA80-E/UNV/12VDC/10V

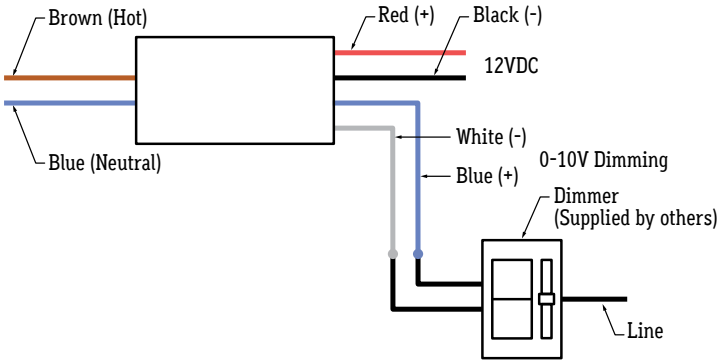

TRA80-E/UNV/24VDC/10V

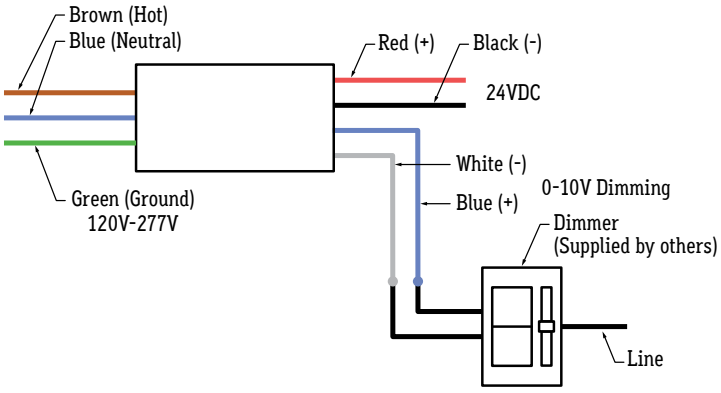

NOTE: Cap off 0-10V dimming wires individually for non-dimming

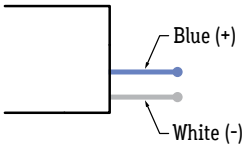

Click here for list of compatible dimmers

CALIFORNIA ACCENT LIGHTING, INC.
2034 E. Lincoln Ave. #431, Anaheim, CA 92806
ph. 800.921.CALI (2254) or 714.535-7900 \ fx. 714.535.7902
info@calilighting.com \ calilighting.com

© CALI. All rights reserved. CALI reserves the right to make changes or withdraw specifications without prior notice.

transFORMER™

Installation Instructions

TRA80-E

Overview

WATTS (VA) PER CIRCUIT

Maximum Wire Length to prevent voltage drop

WIRE SIZE	VOLTAGE	5 VA	10 VA	16 VA	20 VA	25 VA	35 VA	40 VA	50 VA	60 VA	75 VA	80 VA
14GA	12V	51'	49'	46'	44'	42'	39'	37'	35'	32'	30'	28'
14GA	24V	103'	98'	93'	89'	84'	80'	75'	70'	66'	61'	56'
12GA	12V	81'	76'	74'	70'	66'	63'	59'	55'	52'	48'	44'
12GA	24V	162'	155'	147'	140'	132'	125'	118'	111'	103'	96'	89'
10GA	12V	129'	123'	117'	112'	106'	100'	94'	88'	82'	76'	71'
10GA	24V	258'	247'	235'	223'	211'	200'	188'	176'	165'	153'	141'
8GA	12V	205'	196'	186'	177'	168'	158'	149'	140'	130'	121'	112'
8GA	24V	411'	392'	374'	355'	336'	318'	299'	280'	262'	243'	224'

RECOMMENDED: **Only load transformers at 80%**

PERCENT LIGHT OUTPUT TABLE			
WIRE SIZE	DIST. FROM TRANS.	50 VA	80 VA
12GA	20'	99	98
	40'	98	95
	60'	97	89
	80'	95	83
	100	90	80
	160'	83	71
10GA	20'	99	99
	40'	99	97
	60'	98	92
	80'	98	91
	100'	97	88
	160'	90	80
	200'	88	78
8GA	20'	99	99
	40'	99	98
	60'	99	98
	80'	99	99
	100'	98	97
	160'	97	88
	200'	92	83
	400'	83	72

TRANSFORMER					
PRODUCT CODE	MAX WATTS	INPUT	OUTPUT	INPUT AC CURRENT	POWER FACTOR
TRA80-E-UNV-12VDC-10V	80	120-277V	12VDC	0.85A 120VAC	0.96
TRA80-E-UNV-24VDC-10V	80	120-277V	24VDC	0.4A 277VAC	0.94

PRODUCT CARE

- Do not submerge transformer in any liquid
- Do not leave any exposed wires
- Do not cover transformer without proper ventilation
- Do not install damaged transformer

CALI

CALIFORNIA ACCENT LIGHTING, INC.
2034 E. Lincoln Ave. #431, Anaheim, CA 92806
ph. 800.921.CALI (2254) or 714.535-7900 \ fx. 714.535.7902
info@calilighting.com \ calilighting.com

© CALI. All rights reserved. CALI reserves the right to make changes or withdraw specifications without prior notice.